90107 BOW ROLLER

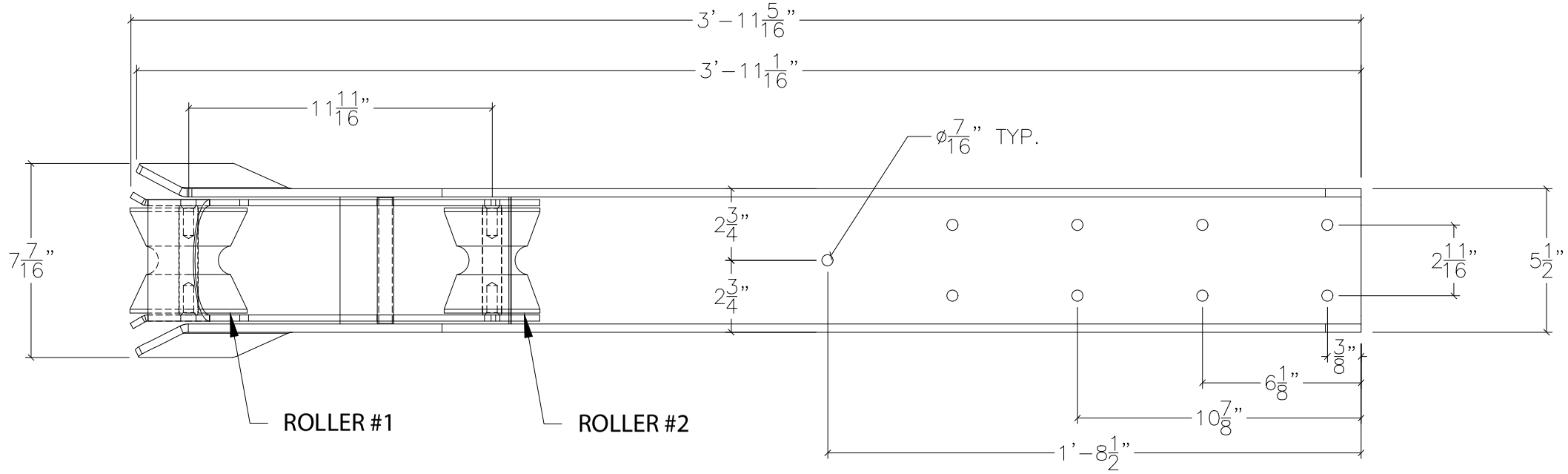

Top View

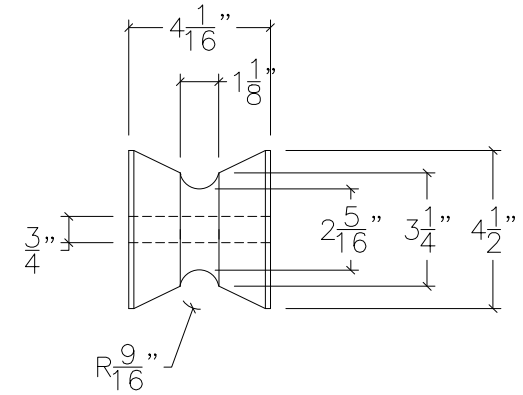

ROLLER #1

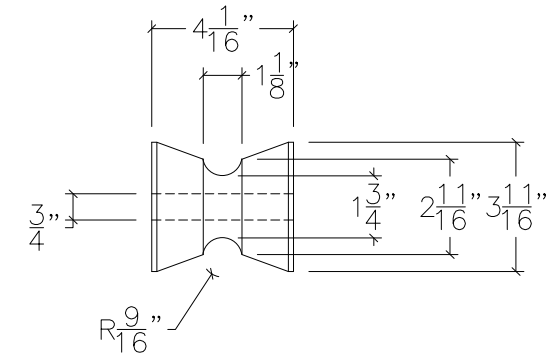

ROLLER #2

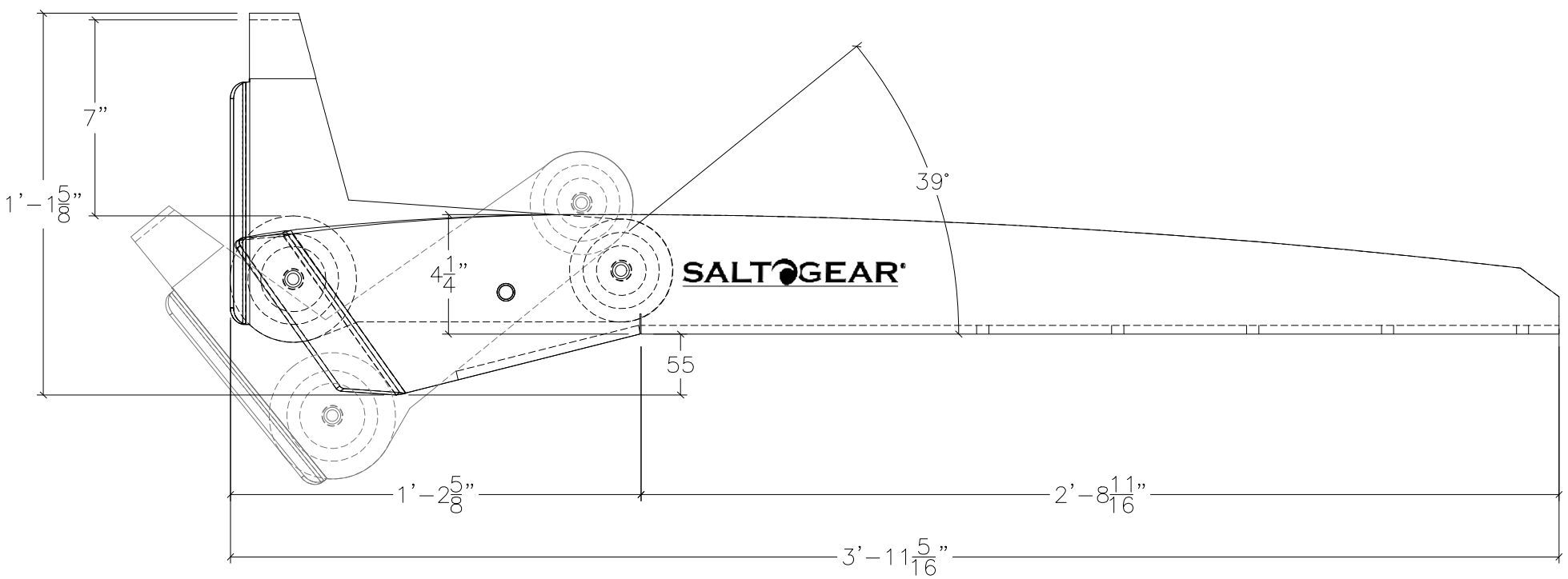

Side View

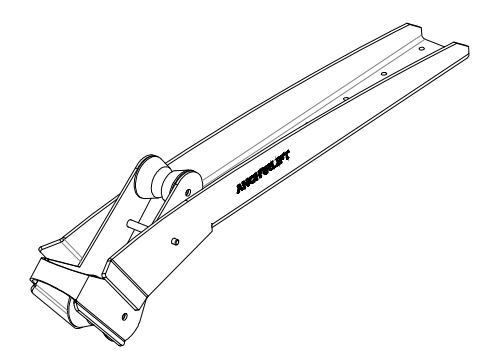

3-D View

NOTE: ALL DIMENSIONS ARE IN INCHES

SALTGEAR® www.saltgear.com	SIZE B	90107 BOW ROLLER ADDRESS		DWG DATE 2/8/2021
	PROJECT MANAGER:	DRAWN BY: JDN	SCALE: N.T.S.	SHEET 1 OF 1