90126 BOW ROLLER

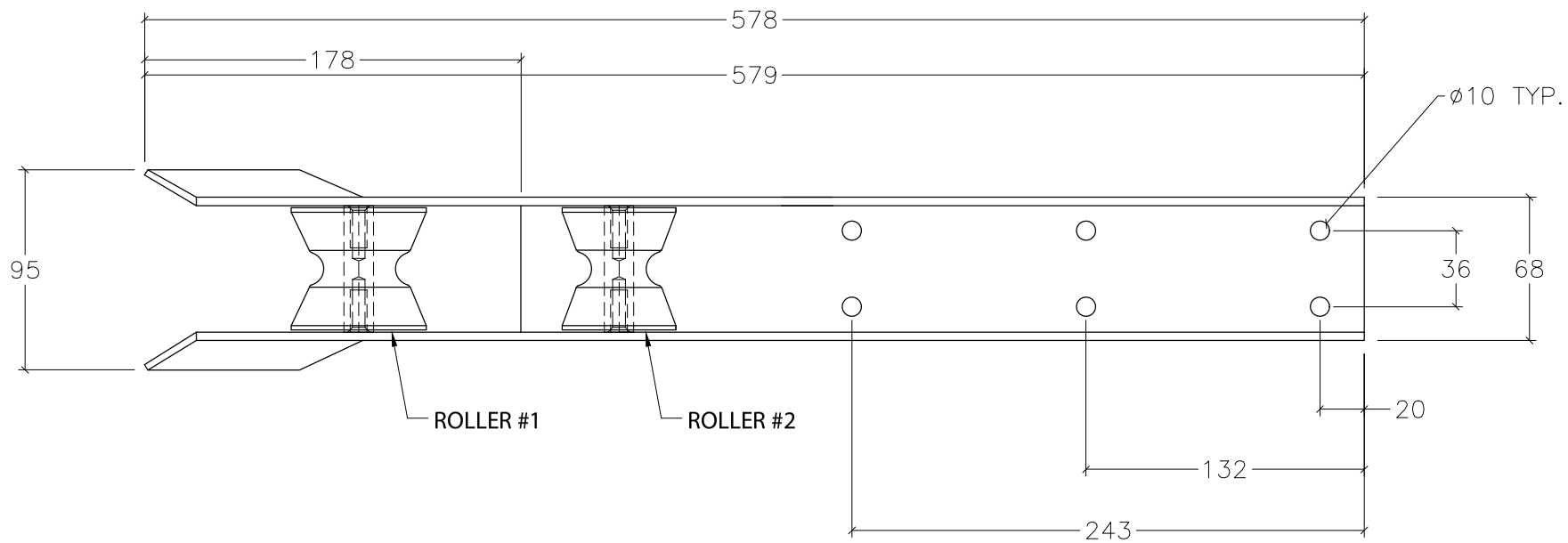

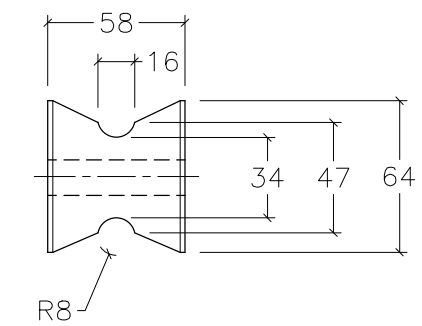

ROLLER #1

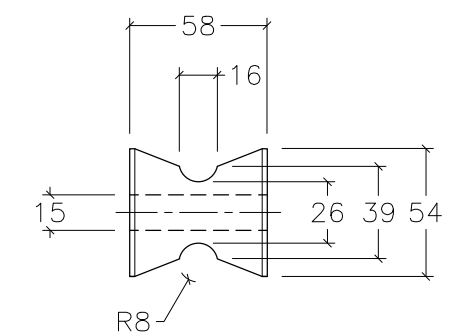

ROLLER #2

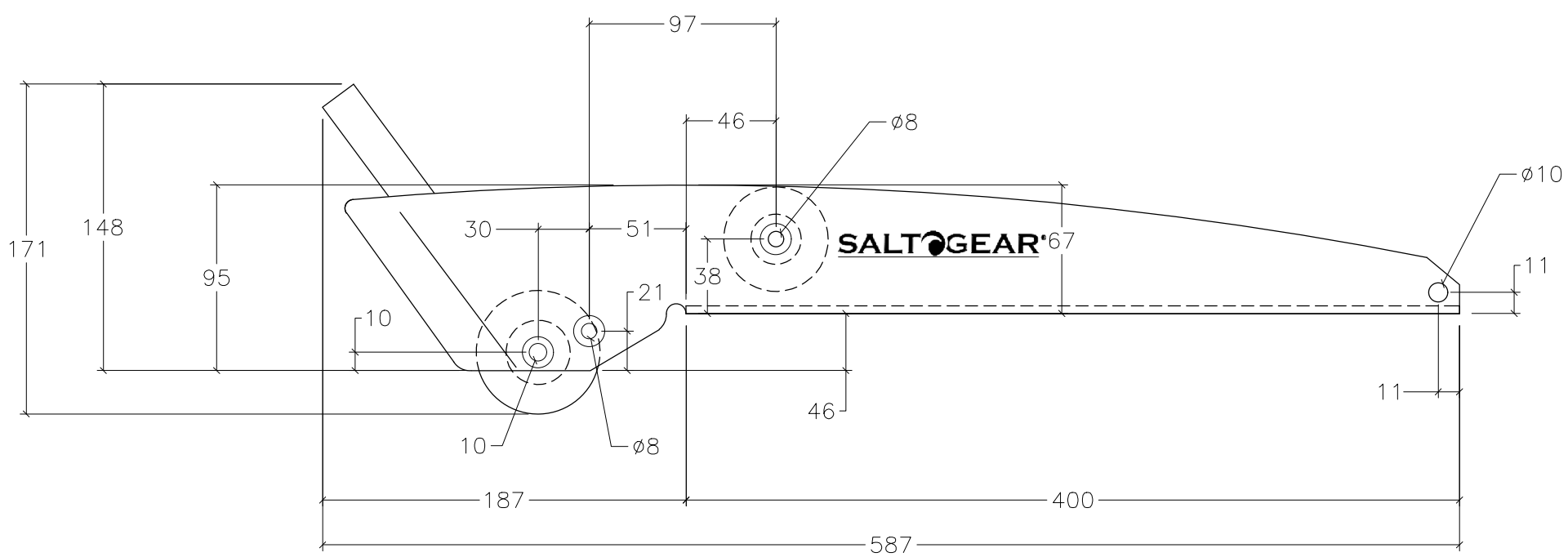

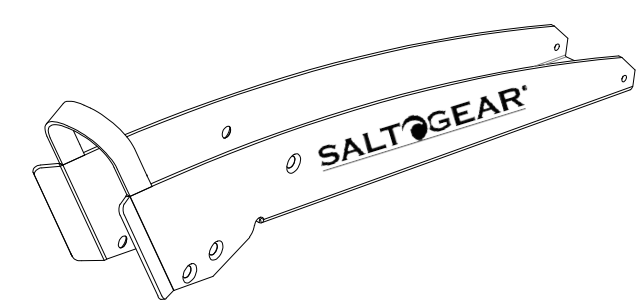

NOTE: ALL DIMENSIONS ARE IN MILLIMETERS

SALTGEAR® www.saltgear.com	SIZE B	PROJECT: 90126 ADDRESS		DWG DATE 07/20/2020
	PROJECT MANAGER:	DRAWN BY: JDN	SCALE: N.T.S.	SHEET 1 OF 1