# 90129 BOW ROLLER

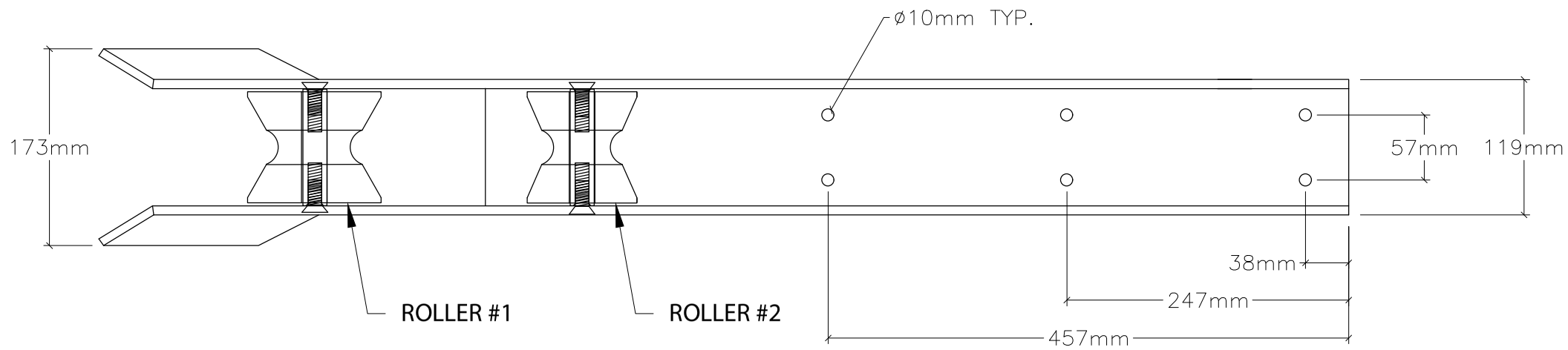


Top View

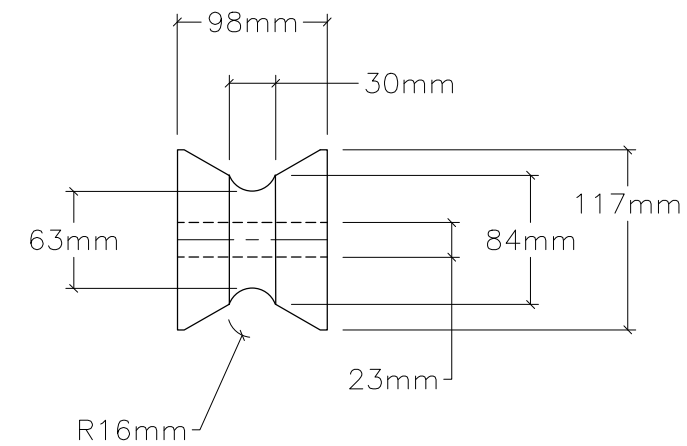


ROLLER #1

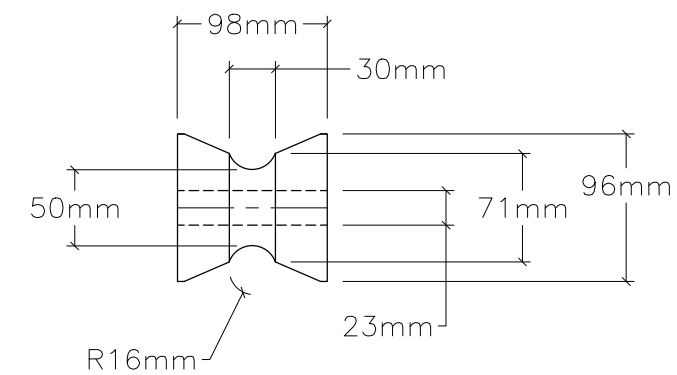


ROLLER #2

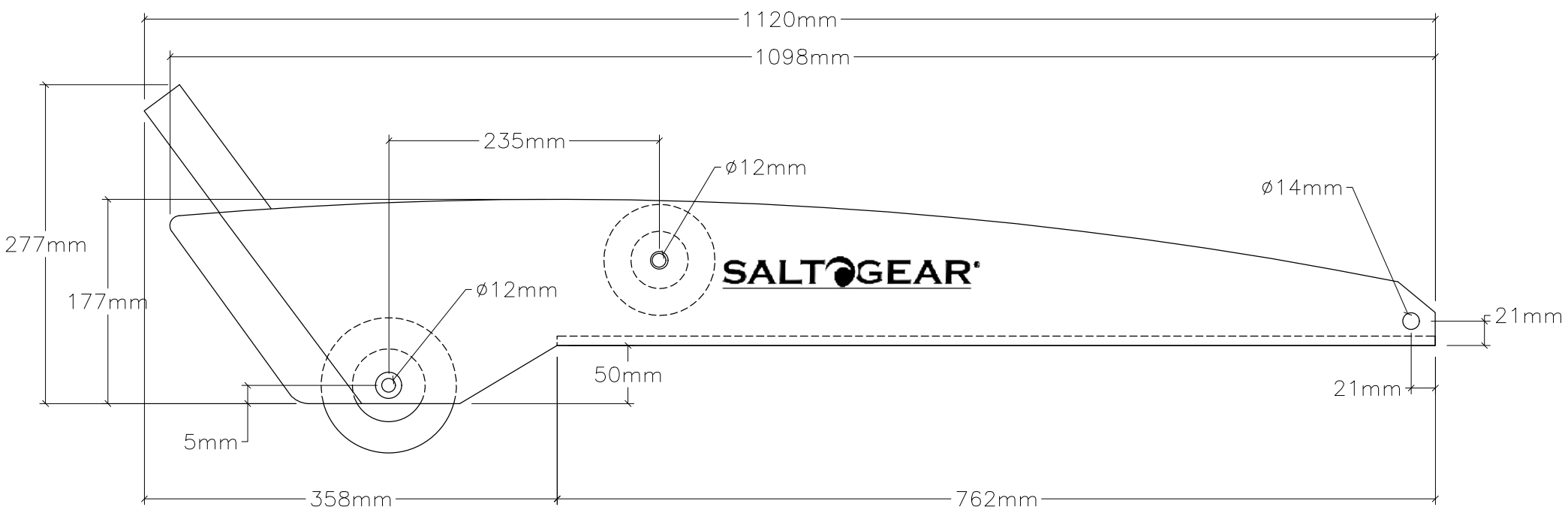


Side View

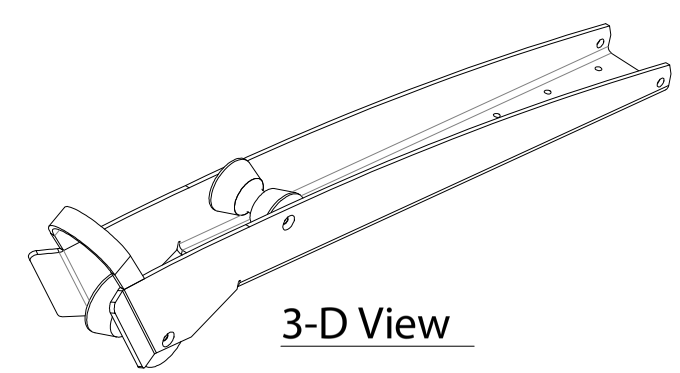

3-D View

NOTE: ALL DIMENSIONS ARE IN MILLIMETERS

| | | | | |
|---|---|---|---|---|
| SALTGEAR® www.saltgear.com | SIZE B | 90129 ADDRESS | | DWG DATE 1/28/2021 |
| | PROJECT MANAGER: | DRAWN BY: JDN | SCALE: N.T.S. | SHEET 1 OF 1 |